TELTONIKA | Telematics

FMC640

Professional tracker with CAN data reading feature

Quick Manual v2.4

CONTENT

Know your device 3

Pinout 4

Wiring scheme 5

Set up your device 6

PC Connection (Windows) 7

How to install USB drivers (Windows) 7

Configuration (Windows) 8

Quick SMS configuration 10

Mounting recommendations 12

LED indications 13

Basic characteristics 13

Electrical characteristics 16

Safety information 18

Certification and Approvals 19

Warranty 21

Warranty disclaimer 21

KNOW YOUR DEVICE

TOP VIEW

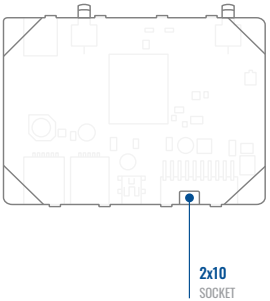

TOP VIEW (WITHOUT COVER)

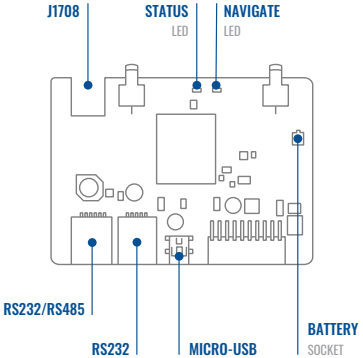

BOTTOM VIEW (WITHOUT COVER)

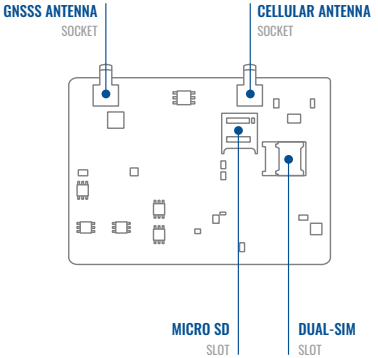

PINOUT

PIN NUMBER	PIN NAME	DESCRIPTION
1	GND (-)	Ground
2	CAN 1L	SAE J1939 CAN interface Low channel 1
3	1WIRE POWER	Power supply pin for Dallas 1-Wire® devices
4	DIN4	Digital input, channel 1
5	DIN2	Digital input, channel 2
6	CAN 2L	SAE J1939 CAN interface Low channel 2
7	AIN2	Analog input, channel 2. Input range: 0-30V/0-10V DC
8	DOUT3	Digital output. Open collector output
9	DOUT2	Digital output. Open collector output
10	AIN3	Analog input, channel 3. Input range: 0-30V/0-10V DC
11	VCC (+)	Power supply (+10-30 V DC)
12	CAN 1H	SAE J1939 CAN interface High channel 1
13	1WIRE DATA	Data channel for Dallas 1-Wire® devices
14	DIN3	Digital input, channel 3
15	IGN (DIN1)	Digital input, channel 1. DEDICATED FOR IGNITION INPUT
16	CAN 2H	SAE J1939 CAN interface High channel 2
17	AIN1	Analog input, channel 1. Input range: 0-30V/0-10V DC
18	DOUT4/ AIN4	Digital output. Open collector output OR Analog input, channel 4. Input range: 0-30V/0-10V DC
19	DOUT1	Digital output. Open collector output
20	K-Line	K-LINE interface for online Tachograph Vehicle Data transfer

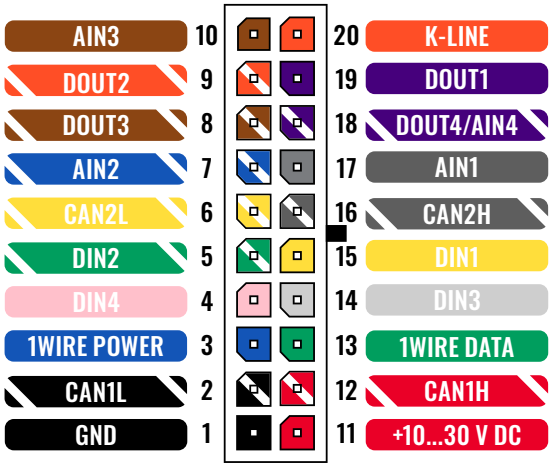

FMC640 2x10 socket pinout

WIRING SCHEME

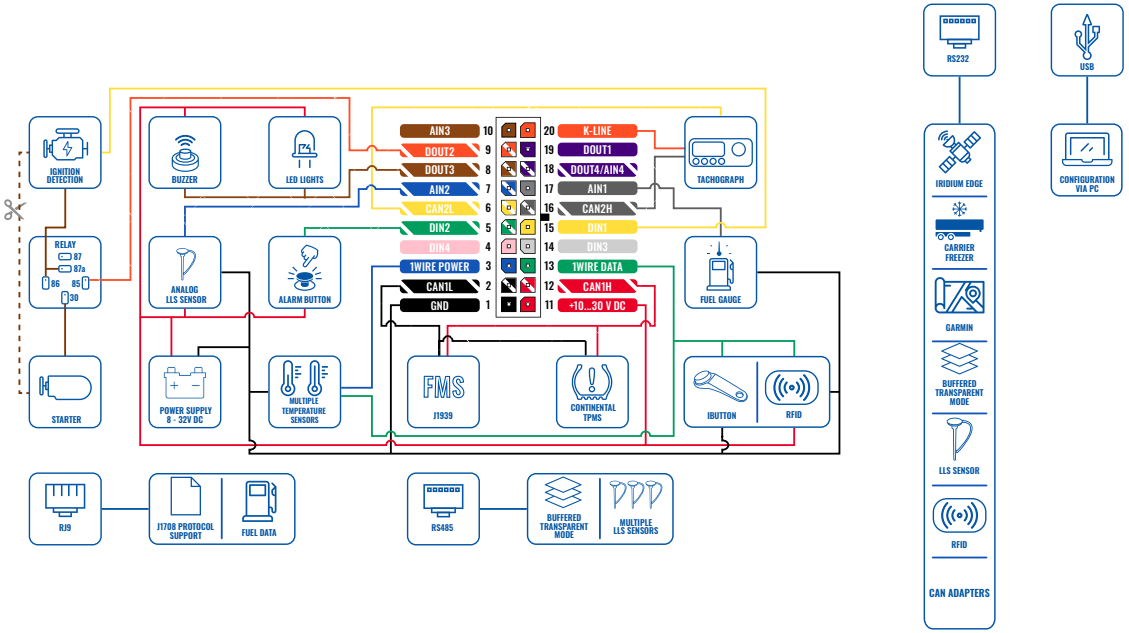

SET UP YOUR DEVICE

HOW TO INSERT MICRO-SIM CARD AND CONNECT THE BATTERY

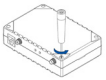

1 UNSCREW SCREWS

Unscrew 4 screws counterclockwise that are located on the **bottom** of the device.

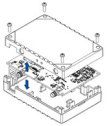

2 COVER REMOVAL

Remove the **cover**

3 SIM CARD INSERT

Insert **SIM** card as shown with PIN request disabled or read Security info[1] how to enter it later in Teltonika Configurator[2]. Make sure that SIM card cut-off corner is pointing forward to slot. SIM slot 1 is closer to PCB, SIM slot 2 is the upper one.

[1] wiki.teltonika.lt/view/FMB641_Security_info

[2] wiki.teltonika.lt/view/Teltonika_Configurator

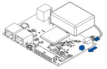

4 BATTERY CONNECTION

Connect **battery** as shown to device.

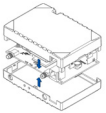

5 ATTACHING COVER BACK

After configuration, see "PC Connection (Windows)[1]", attach device cover back.

[1] Page 7 "PC Connection (Windows)

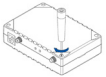

6 DEVICE IS READY

Screw in all screws. Device is ready to be mounted.

SIM card insertion/ removal must be performed when device is powered off – external voltage and internal battery disconnected. Otherwise SIM card might be damaged or device will not detect it.

FMX6 devices use Standard size SIM cards for SIM1 and SIM2. Currently most of the SIM cards provided by operators can be disassembled into 3 parts - Standard/Micro/Nano. Depending on the SIM card construction - during device usage in harsh conditions, SIM assembly might come apart which causes instability when connecting to operator.

To avoid such risk:

1. If possible - ask operator for Standard SIM card with solid construction (not pre-cut to 3 parts)
2. Do not use SIM cards that were previously disassembled (SIM was taken apart previously)
3. If you plan to use only one SIM card - insert it into SIM1 slot (lower slot) - this ensures greater pressure on SIM contacts as the contact bed is pushed by PCB.

When 2 SIM cards are used simultaneously risk is mitigated as well - when SIM1 is inserted, a greater pressure is applied for SIM2, so SIM parts are harder to come lose.

PC CONNECTION (WINDOWS)

1. Power-up FMC640 with **DC voltage (8 – 32 V)** power supply using **supplied power cable**. LED's should start blinking, see **"LED indications[1]"**.
2. Connect device to computer using **Micro-USB cable**:
   - Using Mini-USB cable
     - You will need to install USB drivers, see **"How to install USB drivers (Windows)[2]"**
3. You are now ready to use the device on your computer.

[1] wiki.teltonika-gps.com/view/FMC640_LED_status

[2] Page 7, "How to install USB drivers"

HOW TO INSTALL USB DRIVERS (WINDOWS)

1. Please download COM port drivers from **here**[1].
2. Extract and run **TeltonikaCOMDriver.exe**.
3. Click **Next** in driver installation window.
4. In the following window click **Install** button.
5. Setup will continue installing the driver and eventually the confirmation window will appear. Click **Finish** to complete the setup.

[1] teltonika-gps.com/downloads/en/FMC640/TeltonikaCOMDriver.zip

CONFIGURATION (WINDOWS)

At first FMC640 device will have default factory settings set. These settings should be changed according to the users needs. Main configuration can be performed via **Teltonika Configurator**[1] software. Get the latest **Configurator** version from **here**[2]. Configurator operates on **Microsoft Windows OS** and uses prerequisite **MS .NET Framework.** Make sure you have the correct version installed.

[1] wiki.teltonika-gps.com/view/Teltonika_Configurator

[2] wiki.teltonika-gps.com/view/Teltonika_Configurator_versions

MS .NET REQUIREMENTS

Operating system	MS .NET Framework version	Version	Links
Windows Vista Windows 7 Windows 8.1 Windows 10	MS .NET Framework 4.6.2	32 and 64 bit	**www.microsoft.com**[1]

1 dotnet.microsoft.com/en-us/download/dotnet-framework/net462

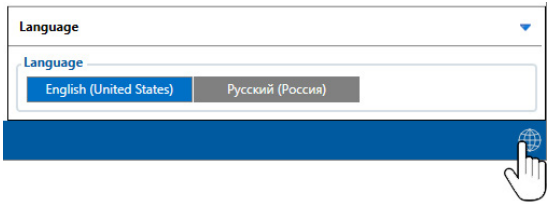

Downloaded Configurator will be in compressed archive. Extract it and launch Configurator.exe. After launch software language can be changed by clicking in the right bottom corner.

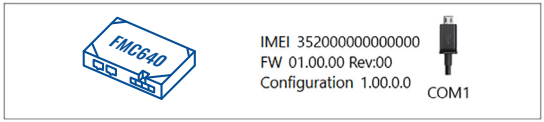

Configuration process begins by pressing on connected device.

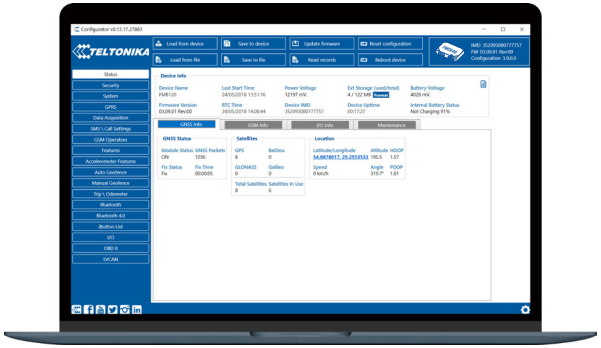

After connection to Configurator **Status window** will be displayed.

Various **Status window**[1] tabs display information about **GNSS**[2], **GSM**[3], **I/O**[4], **Maintenance**[5] and etc. FMC640 has one user editable profile, which can be loaded and saved to the device. After any modification of configuration the changes need to be saved to device using **Save to device** button. Main buttons offer following functionality:

Load from device – loads configuration from device.

Save to device – saves configuration to device.

Load from file – loads configuration from file.

Save to file – saves configuration to file.

Update firmware – updates firmware on device.

Read records – reads records from the device.

Reboot device – restarts device.

Reset configuration – sets device configuration to default.

Most important configurator section is **GPRS** – where all your server and **GPRS settings**[6] can be configured and **Data Acquisition**[7] – where data acquiring parameters can be configured. More details about FMC640 configuration using Configurator can be found in our **Wiki**[8].

[1] wiki.teltonika-gps.com/view/FMC640_Status_info

[2] wiki.teltonika-gps.com/view/FMC640_Status_info#GNSS_Info

[3] wiki.teltonika-gps.com/view/FMC6401_Status_info#GSM_Info

[4] wiki.teltonika-gps.com/view/FMC640_Status_info#I.2FO_Info

[5] wiki.teltonika-gps.com/view/FMC640_Status_info#Maintenance

[6] wiki.teltonika-gps.com/index.php?title=FMC640_GPRS_settings

[7] wiki.teltonika-gps.com/index.php?title=FMC640_Data_acquisition_settings

[8] wiki.teltonika-gps.com/index.php?title=FMC640_Configuration

QUICK SMS CONFIGURATION

Default configuration has optimal parameters present to ensure best performance of track quality and data usage.

Quickly set up your device by sending this SMS command to it:

```
«  setparam 2001:APN;2002:APN_username;2003:APN_password;2004:Domain;2005:Port;2006:0»
```

Note: Before SMS text, two space symbols should be inserted.

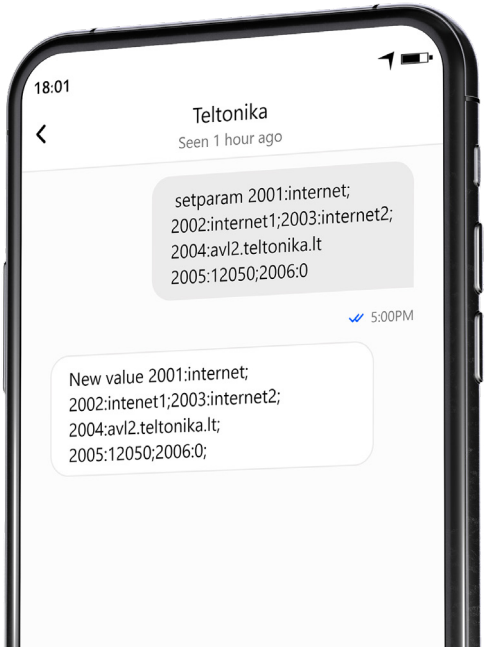

GPRS SETTINGS:

1. **2001** – APN
2. **2002** – APN username (if there are no APN username, empty field should be left)
3. **2003** – APN password (if there are no APN password, empty field should be left)

SERVER SETTINGS:

4. **2004** – Domain
5. **2005** – Port
6. **2006** – Data sending protocol (0 – TCP, 1 – UDP)

DEFAULT CONFIGURATION SETTINGS

MOVEMENT AND IGNITION DETECTION:

VEHICLE MOVEMENT
will be detected by accelerometer

IGNITION
will be detected by vehicle power voltage between 13,2 – 30 V

DEVICE MAKES A RECORD ON STOP IF:

1 HOUR PASSES
while vehicle is stationary and ignition is off

RECORDS SENDING TO SERVER:

EVERY 120 SECOND
it is sent to the server If device has made a record

DEVICE MAKES A RECORD ON MOVING IF ONE OF THESE EVENTS HAPPEN:

PASSES
300 seconds

VEHICLE DRIVES
100 meters

VEHICLE TURNS
10 degrees

SPEED DIFFERENCE
between last coordinate and current position is greater than 10 km/h

After successful SMS configuration, FMC640 device will synchronize time and update records to configured server. Time intervals and default I/O elements can be changed by using **Teltonika Configurator**[1] or **SMS parameters**[2].

[1] wiki.teltonika-gps.com/view/Teltonika_Configurator

[2] wiki.teltonika-gps.com/view/Template:FMB_Device_Family_Parameter_list

MOUNTING RECOMMENDATIONS

CONNECTING WIRES

- Wires should be fastened to the other wires or non-moving parts. Try to avoid heat emitting and moving objects near the wires.
- The connections should not be seen very clearly. If factory isolation was removed while connecting wires, it should be applied again.
- If the wires are placed in the exterior or in places where they can be damaged or exposed to heat, humidity, dirt, etc., additional isolation should be applied.
- Wires cannot be connected to the board computers or control units.

CONNECTING POWER SOURCE

- Be sure that after the car computer falls asleep, power is still available on chosen wire. Depending on car, this may happen in 5 to 30 minutes period.
- When module is connected, measure voltage again to make sure it did not decrease.
- It is recommended to connect to the main power cable in the fuse box.
- Use 3A, 125V external fuse.

CONNECTING IGNITION WIRE

- Be sure to check if it is a real ignition wire i. e. power does not disappear after starting the engine.
- Check if this is not an ACC wire (when key is in the first position, most of the vehicle electronics are available).
- Check if power is still available when you turn off any of vehicles devices.
- Ignition is connected to the ignition relay output. As alternative, any other relay, which has power output when ignition is on, may be chosen.

CONNECTING GROUND WIRE

- Ground wire is connected to the vehicle frame or metal parts that are fixed to the frame.
- If the wire is fixed with the bolt, the loop must be connected to the end of the wire.
- For better contact scrub paint from the spot where loop is going to be connected.

LED INDICATIONS

NAVIGATION LED INDICATIONS

BEHAVIOUR	MEANING
Permanently switched on	GNSS signal is not received
Blinking every second	Normal mode, GNSS is working
Off	GNSS is turned off because: Device is not working or Device is in sleep mode
Blinking fast constantly	Device firmware is being flashed

STATUS LED INDICATIONS

BEHAVIOUR	MEANING
Blinking every second	Normal mode
Blinking every two seconds	Sleep mode
Blinking fast for a short time	Modem activity
Off	Device is not working or Device is in boot mode

BASIC CHARACTERISTICS

MODULE

Name	Quectel EG91-EX
Technology	LTE Cat 1, UMTS, GSM

GNSS

GNSS	GPS, GLONASS, GALILEO, BEIDOU, SBAS, QZSS, DGPS, AGPS
Receiver	33/99 channel
Tracking sensitivity	-165 dBM
Accuracy	< 3 m
Hot start	< 1 s
Warm start	< 25 s
Cold start	< 35 s

CELLULAR

Technology	LTE(CaT1)/3G(UMTS/HSPA)/2G(GSM/GPRS)/GNSS
2G bands	EG91-EX: GSM: B3/B8
3G bands	EG91-EX: WCDMA: B1/B8
4G bands	EG91-EX: LTE FDD: B1/B3/B7/B8/B20/B28
Data transfer	LTE: LTE FDD: Max 10Mbps (DL)/ Max 5Mbps (UL) UMTS: WCDMA: Max 384Kbps (DL)/ Max 384Kbps (UL)
Data support	SMS (text/data)

POWER

Input voltage range	10 - 30 V DC with overvoltage protection
Back-up battery	550 mAh 8,4V Ni-MH battery
Internal fuse	3 A, 125 V
2 W max. Current consumption at 12 V	GPRS: average 60 mA Nominal: average 45 mA GNSS sleep: average 32 mA Deep Sleep: average 4 mA Online Deep Sleep: average 11 mA
2 W max. Current consumption at 24 V	GPRS: average 35 mA Nominal: average 24 mA GNSS sleep: average 17 mA Deep Sleep: average 2,9 mA Online Deep Sleep: average 7 mA

BLUETOOTH® TECHNOLOGY

Specification	5.0 + LE
Supported peripherals	Temperature and Humidity sensor, Bluetooth® LE sensors support

INTERFACE

Digital Inputs	
Digital Outputs	4
Analog Inputs	4
1-Wire temperature sensors	6
1-Wire iButton	1
RS232	2
RS485	1
CAN J1939	2
J1708	1
K-Line	1
LVCAN/ALLCAN	1
GNSS antenna	External High Gain
GSM antenna	External High Gain
USB	2.0 Mini-USB
LED indication	2 status LED lights
SIM	2x SIM Card (Dual-SIM) or 1x eSIM
Memory	2MB internal flash memory and external SD card up to 32 GB

FEATURES

Sensors	Accelerometer
Scenarios	**Green Driving**, **Over Speeding detection**, **Jamming detection**, Excessive Idling detection, Towing detection, Crash detection, Immobilizer, **iButton Read Notification**[1]

[1] wiki.teltonika-gps.com/view/FMC640_Features_settings

Functionalities	**Crash detection**, Auto Geofence, Manual Geofence, Trip Detection, Odometer, DDD download and Tacho Online Data[2]
Sleep modes	GPS Sleep, Online Deep Sleep, Deep Sleep
Configuration and firmware update	FOTA Web, FOTA, Teltonika Configurator (USB)
SMS	Configuration, Events, DOUT Control, Debug
GPRS commands	Configuration, Debug, DOUT Control
Time Synchronization	GPS, NITZ, NTP
Fuel monitoring	LLS (Analog), LV-CAN, ALL-CAN, CAN FMS, RS232/RS485 Fuel Sensor, Ultrasonic level sensor
Ignition detection	Digital Input , Accelerometer, External Power Voltage

PHYSICAL SPECIFICATION

Dimensions	104,1 x 76,8 x 31,5 mm (L x W x H)
Weight	197 g

OPERATING ENVIRONMENT

Operating temperature (without battery)	-40 °C to +85 °C
Storage temperature (without battery)	-40 °C to +85 °C
Battery Charging temperature	Ta = 20 ± 5 °C (Ambient Temp.)
Battery Discharge temperature	Ta = 20 ± 5 °C (Ambient Temp.)
Battery storage temperature	-20 °C to +45° C
Operating humidity	5% to 95% non-condensing
Ingress Protection Rating	IP41

[2] wiki.teltonika-gps.com/view/FMC640_Accelerometer_Features_settings

ELECTRICAL CHARACTERISTICS

CHARACTERISTIC DESCRIPTION	VALUE			
	MIN.	TYP.	MAX.	UNIT
SUPPLY VOLTAGE				
Supply Voltage (Recommended Operating Conditions)	+10		+30	V
DIGITAL OUTPUT (OPEN DRAIN GRADE)				
Drain current (Digital Output OFF)			120	µA
Drain current (Digital Output ON, Recommended Operating Conditions)			0.5	A
Static Drain-Source resistance (Digital Output ON)		400	300	mΩ
DIGITAL INPUT				
Input resistance (DIN1)	15			kΩ
Input resistance (DIN2)	15			kΩ
Input resistance (DIN3)	15			kΩ
Input resistance (DIN4)	15			kΩ

CHARACTERISTIC DESCRIPTION	VALUE			
	MIN.	TYP.	MAX.	UNIT
Input voltage (Recommended Operating Conditions)	0		Supply voltage	V
Input Voltage threshold (DIN1, DIN2, DIN3, DIN4)		7.5		V
ANALOG INPUT				
Input Voltage (Recommended Operating Conditions), Range 1	0		+10	V
Input resistance		120		kΩ
Input Voltage (Recommended Operating Conditions), Range 2	0		+30	V
Input resistance		147		kΩ
1-WIRE				
Supply voltage	+3.3		+3.9	V
Output inner resistance		7		Ω
Output current (UOUT> 3.0 V)		30		mA
Short circuit current (UOUT> 0 V)		75		mA

CHARACTERISTIC DESCRIPTION	VALUE			
	MIN.	TYP.	MAX.	UNIT
CAN INTERFACE				
Internal terminal resistors CAN bus		120		Ω
Differential input resistance	19	30	52	kΩ
Recessive output voltage	2	2.5	3	V
Differential output voltage	0.5	0.7	0.9	V
Common mode input voltage	-30		30	V

SAFETY INFORMATION

This message contains information on how to operate FMC640 safely. By following these requirements and recommendations, you will avoid dangerous situations. You must read these instructions carefully and follow them strictly before operating the device!

- The device uses SELV limited power source. The nominal voltage is +12 V DC. The allowed voltage range is +10...+30 V DC.
- To avoid mechanical damage, it is advised to transport the device in an impact-proof package. Before usage, the device should be placed so that its LED indicators are visible. They show the status of device operation.
- When connecting the 2x10 connector cables to the vehicle, the appropriate jumpers of the power supply of the vehicle should be disconnected.
- Before dismounting the device from the vehicle, the 2x10 connector must be disconnected.
- The device is designed to be mounted in a zone of limited access, which is inaccessible to the operator. All related devices must meet the requirements of EN 62368-1 standard.
- The device FMC640 is not designed as a navigational device for boats.

Do not disassemble the device. If the device is damaged, the power supply cables are not isolated or the isolation is damaged, DO NOT touch the device before unplugging the power supply.

All wireless data transferring devices produce interference that may affect other devices which are placed nearby.

The device must be connected only by qualified personnel.

The device must be firmly fastened in a predefined location.

The programming must be performed using a PC with autonomic power supply.

Installation and/or handling during a lightning storm is prohibited.

The device is susceptible to water and humidity.

CERTIFICATION AND APPROVALS

This sign on the package means that it is necessary to read the User's Manual before your start using the device. Full User's Manual version can be found in our **Wiki**[1].

1 wiki.teltonika-gps.com/index.php?title=FMC640

Hereby, Teltonika declare under our sole responsibility that the above described product is in conformity with the relevant Community harmonization: European Directive 2014/53/EU (RED).

UK Conformity Assessed (UKCA) marking is a conformity mark that indicates conformity with the applicable requirements for above described products sold within Great Britain.

The RoHS1 is a directive regulating the manufacture, import and distribution of Electronics and Electrical Equipment (EEE) within the EU, which bans from use 10 different hazardous materials (to date).

E-Mark and e-Mark are the European conformity marks issued by the transport sector, indicating that the products comply with relevant laws and regulations or directives. Vehicles and related products need to go through the E-Mark certification process to be legally sold in Europe.

This sign on the package means that all used electronic and electric equipment should not be mixed with general household waste.

The Declaration EAC and the Certificate EAC in conformity with the technical regulation TR CU of the EurAsEC Customs Union are EAC certification documents issued by independent organizations. Such organizations perform their function through laboratories accredited to the public agencies in charge of the supervision of metrology and standardization in the three countries of the EAC Custom Union, joining at the moment the certification system : Russia, Belarus, Kazakhstan, Armenia and Kyrgyzstan.

The Australian Standard AS/NZS 4417.1 and AS/NZS 4417.2 Marking of electrical products to indicate compliance with regulations – General rules for use of the mark provides general requirements for the use of the RCM including location of the marking on the equipment and its dimensional requirements.

SDPPI (Direktur Jenderal Sumber Daya dan Perangkat Pos dan informatika) is Indonesian Directorate General of Resources and Equipment for Post and Information Technology.

SIRIM QAS International Sdn. Bhd. is Malaysia's leading testing,inspection and certification body.

REACH addresses the production and use of chemical substances, and their potential impacts on both human health and the environment. Its 849 pages took seven years to pass, and it has been described as the most complex legislation in the Union's history and the most important in 20 years. It is the strictest law to date regulating chemical substances and will affect industries throughout the world.

The Bluetooth® word mark and logos are registered trademarks owned by Bluetooth SIG, Inc. and any use of such marks by UAB Teltonika Telematics is under license. Other trademarks and trade names are those of their respective owners.

DECLARATION OF IMEI ASSIGNMENT

The IMEI number is used by a GSM network to identify valid devices and therefore can be used for stopping a stolen phone from accessing that network. For example, if a mobile phone is stolen, the owner can call their network provider and instruct them to blacklist the phone using its IMEI number. This renders the phone useless on that network and sometimes other networks too, whether or not the phone's subscriber identity module (SIM) is changed.

CHECK ALL CERTIFICATES

All newest certificates may be found in our **Wiki**[2].

[2] wiki.teltonika-gps.com/view/FMC640_Certification_%26_Approvals

WARRANTY

We guarantee our products 24-month warranty[1] period.

All batteries carry a 6-month warranty period.

Post-warranty repair service for products is not provided.

If a product stops operating within this specific warranty time, the product can be:

- Repaired
- Replaced with a new product
- Replaced with an equivalent repaired product fulfilling the same functionality
- Replaced with a different product fulfilling the same functionality in case of EOL for the original product

[1] Additional agreement for an extended warranty period can be agreed upon separately.

WARRANTY DISCLAIMER

- Customers are only allowed to return products as a result of the product being defective, due to order assembly or manufacturing fault.
- Products are intended to be used by personnel with training and experience.
- Warranty does not cover defects or malfunctions caused by accidents, misuse, abuse, catastrophes, improper maintenance or inadequate installation – not following operating instructions (including failure to heed warnings) or use with equipment with which it is not intended to be used.
- Warranty does not apply to any consequential damages.
- Warranty is not applicable for supplementary product equipment (i. e. PSU, power cables, antennas) unless the accessory is defective on arrival.
- **More information on what is RMA**[1]

[1] wiki.teltonika-gps.com/view/RMA_guidelines