TELTONIKA

FMB002

Easy OBDII tracker

Quick Manual v1.7

Table of Contents

Know your device

Bottom view

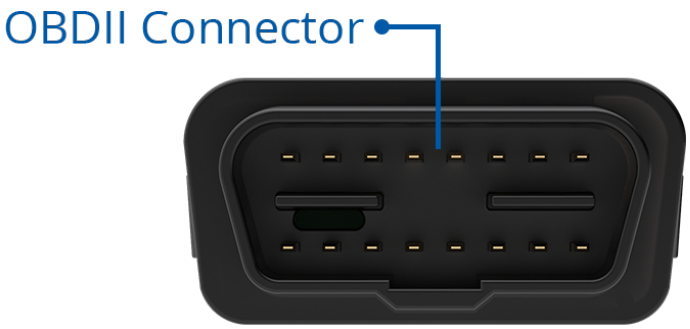

Top view
(without cover)

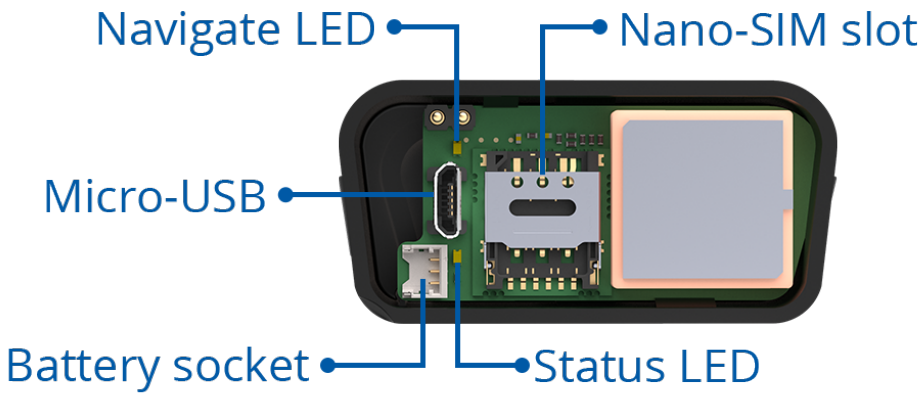

Figure 1 FMB002 device view

Pinout

Table 1 OBDII pinout

PIN NUMBER	PIN NAME	DESCRIPTION
2	PWM_BUS+/VPW	
4	GND (-)	Ground
5	GND (-)	Ground
6	CAN_H	CAN high
7	K-Line	
10	PWM_BUS-	
14	CAN_L	CAN low
15	L-Line	
16	VCC (10 - 30) V DC (+)	Power supply (+10-30 V DC)

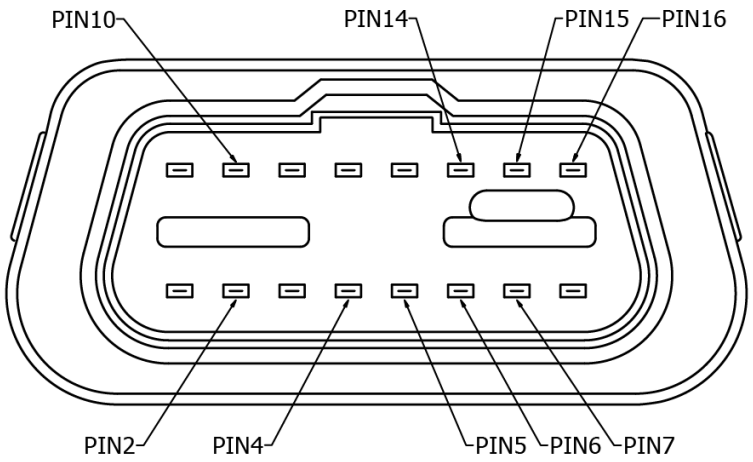

Figure 2 FMB002 OBDII socket pinout

Set up your device

How to insert Micro-SIM card and connect the battery

1. Open the top cover of the device. Cover is opened by unclipping it at the recessed corner.
2. Insert **Nano-SIM** card as shown with **PIN request disabled** or read our [Wiki]() how to enter it later in [Teltonika Configurator]().
   Make sure that Nano-SIM card is fitted properly into the holder.
3. Connect the battery as shown to device.
4. After **configuration**, see **"PC Connection (Windows)",** attach device **cover** back.

   Device is ready to be mounted.

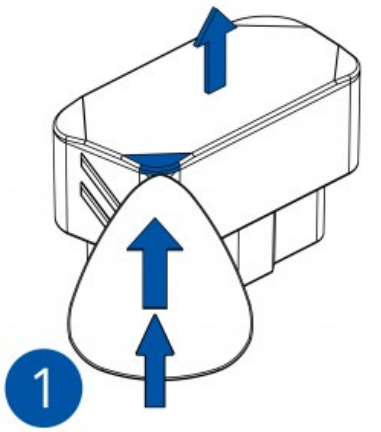

Figure 4 Device case removal

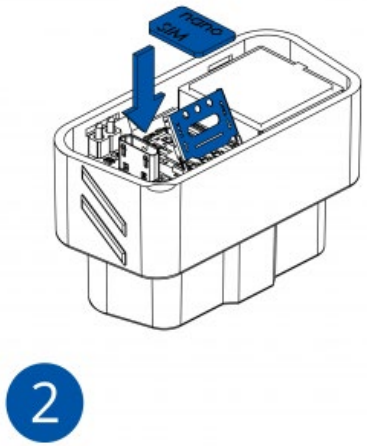

Figure 3 Nano-SIM card insert

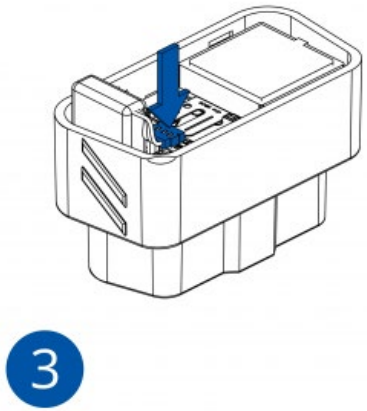

Figure 6 Battery connection

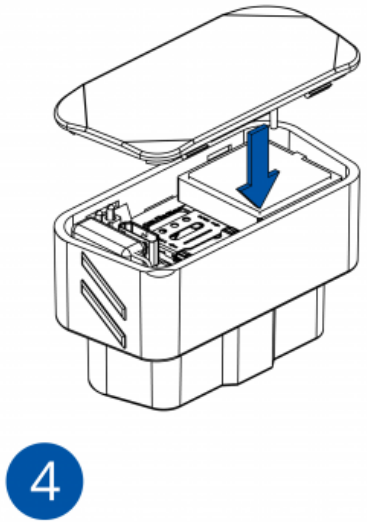

Figure 5 Attach device cover back

PC Connection (Windows)

1. Power-up FMB002 with **DC voltage (10 – 30 V)** power supply using **supplied power cable**. LED's should start blinking, see "LED indications".
2. Connect device to computer using **Micro-USB cable** or **Bluetooth** connection:
   - Using **Micro-USB cable**
     - You will need to install USB drivers, see "How to install USB drivers (Windows)"
   - Using **Bluetooth**
     - FMB002 Blue-tooth is enabled by default. Turn on **Bluetooth** on your PC, then select **Add Bluetooth or other device** > **Bluetooth**. Choose your device named – "**FMBxxx_last_7_imei_digits**", without **LE** in the end. Enter default password **5555**, press **Connect** and then select **Done**.
3. You are now ready to use the device on your computer.

How to install USB drivers (Windows)

1. Please download COM port drivers from **here**.
2. Extract and run **TeltonikaCOMDriver.exe**.
3. Click **Next** in driver installation window.
4. In the following window click **Install** button.

Setup will continue installing the driver and eventually the confirmation window will appear. Click **Finish** to complete the setup.

Configuration (Windows)

At first FMB002 device will have default factory settings set. These settings should be changed according to the user's needs. Main configuration can be performed via **Teltonika Configurator** software. Get the latest **Configurator** version from **here**. Configurator operates on **Microsoft Windows OS** and uses prerequisite **MS .NET Framework**. Make sure you have the correct version installed.

Table 2 MS .NET requirements

MS .NET REQUIREMENTS			
Operating system	MS .NET Framework version	Version	Links
Windows Vista Windows 7 Windows 8.1 Windows 10	MS .NET Framework 4.6.2	32 and 64 bit	www.microsoft.com

Downloaded **Configurator** will be in compressed archive. Extract it and launch **Configurator.exe**. After launch software language can be changed by clicking in the right bottom corner (**Figure 7 Language selection**).

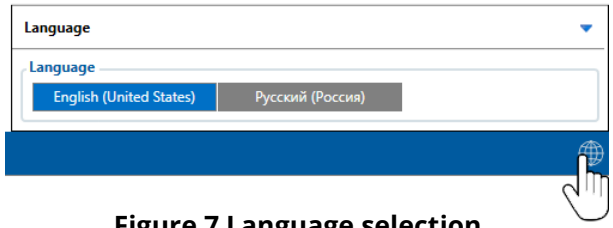

Figure 7 Language selection

Configuration process begins by pressing on connected device (Figure 8 Device connected via USB).

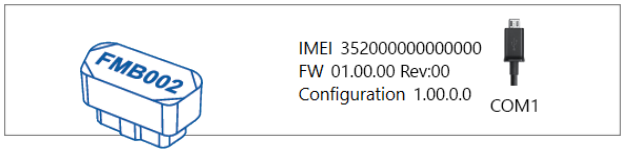

Figure 8 Device connected via USB

After connection to Configurator **Status window** will be displayed (Figure 9 Configurator Status window).

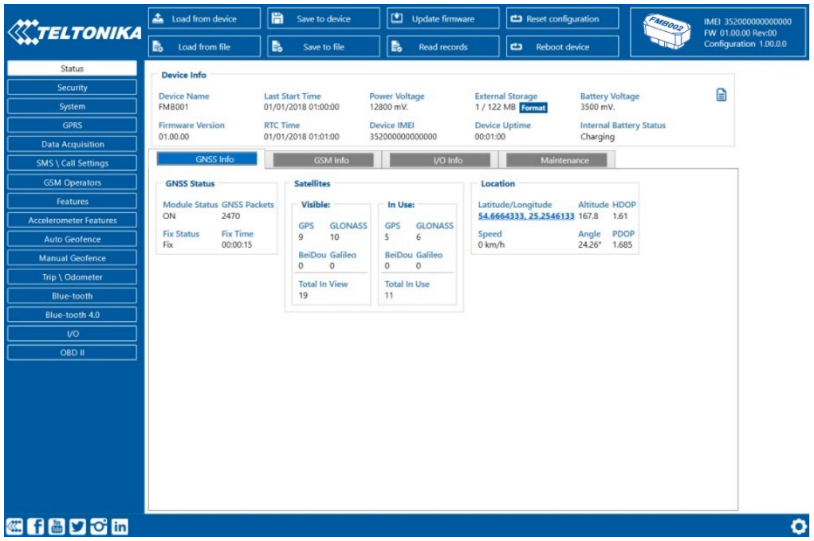

Figure 9 Configurator Status window

Various Status window tabs display information about GNSS, GSM, I/O, Maintenance and etc. FMB002 has one user editable profile, which can be loaded and saved to the device. After any modification of configuration the changes need to be saved to device using **Save to device** button. Main buttons offer following functionality:

1. **Load from device** – loads configuration from device.
2. **Save to device** – saves configuration to device.
3. **Load from file** – loads configuration from file.
4. **Save to file** – saves configuration to file.
5. **Update firmware** – updates firmware on device.
6. **Read records** – reads records from the device.
7. **Reboot device** – restarts device.
8. **Reset configuration** – sets device configuration to default.

Most important configurator section is **GPRS** – where all your server and GPRS settings can be configured and Data Acquisition **–** where data acquiring parameters can be configured.
More details about FMB002 configuration using Configurator can be found in our Wiki.

Quick SMS configuration

Default configuration has optimal parameters present to ensure best performance of track quality and data usage.

Quickly set up your device by sending this SMS command to it:

```
"  setparam 2001:APN;2002:APN_username;2003:APN_password;2004:Domain;2005:Port;2006:0"
```

Note: Before SMS text, two space symbols should be inserted.

GPRS settings:

- 2001 – APN
- 2002 – APN username (if there are no APN username, empty field should be left)
- 2003 – APN password (if there are no APN password, empty field should be left)

Server settings:

- 2004 – Domain
- 2005 – Port
- 2006 – Data sending protocol (0 – TCP, 1 – UDP)

Default configuration settings

Movement and ignition detection:

Vehicle movement will be detected by accelerometer

Ignition will be detected by vehicle power voltage between 13,2 – 30 V

Device makes a record **On Moving** if one of these events happen:

300 seconds passes

Vehicle turns 10 degrees

Vehicle drives 100 meters

Speed difference between last coordinate and current position is greater than 10 km/h

Device makes a record **On Stop** if:

1 hour passes while vehicle is stationary and ignition is off

Records sending to server:

If device has made a record it is sent to the server every 120 seconds

After successful SMS configuration, FMB002 device will **synchronize time** and **update records** to **configured server**. Time intervals and default I/O elements can be changed by using [Teltonika Configurator] or [SMS parameters].

Mounting recommendations

- Connecting the device to the vehicle:
  - Find OBDII connector in your vehicle **(Figure 10. Most common OBDII connector locations)**.

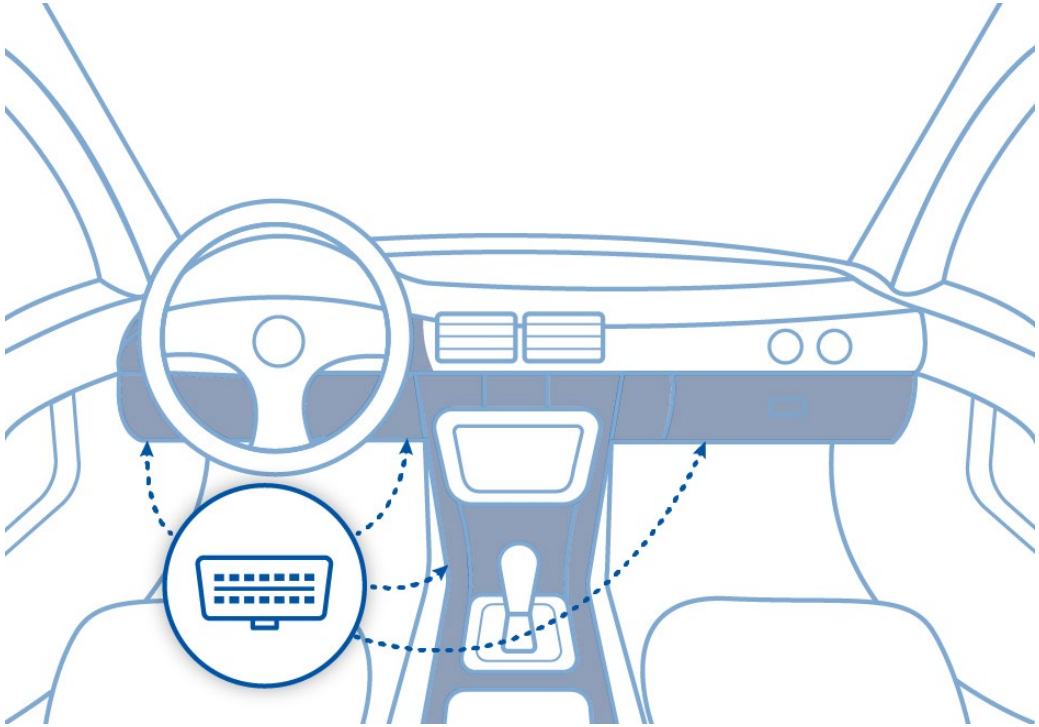

Figure 10. Most common OBDII connector locations

LED indications

Table 3 Navigation LED indications

BEHAVIOUR	MEANING
Permanently switched on	GNSS signal is not received
Blinking every second	Normal mode, GNSS is working
Off	GNSS is turned off because: Device is not working or Device is in sleep mode
Blinking fast constantly	Device firmware is being flashed

Table 4 Status LED indications

BEHAVIOUR	MEANING
Blinking every second	Normal mode
Blinking every two seconds	Sleep mode
Blinking fast for a short time	Modem activity
Off	Device is not working or Device is in boot mode

Basic characteristics

Table 5 Basic characteristics

MODULE	
Name	Teltonika TM2500
Technology	GSM, GPRS, GNSS, BLUETOOTH
GNSS	
GNSS	GPS, GLONASS, GALILEO, BEIDOU, SBAS, QZSS, DGPS, AGPS
Receiver	33 channel
Tracking sensitivity	-165 dBM
Accuracy	< 3 m
Hot start	< 1 s
Warm start	< 25 s
Cold start	< 35 s
CELLULAR	
Technology	GSM
2G bands	Quad-band 850 / 900 / 1800 / 1900 MHz
Maximum output power	GSM 900: 33dBm±2dB (Rated conducted) GSM 1800: 30dBm±2dB (Rated conducted) Bluetooth: 5.22 dBm (Maximum out EIRP)

	Bluetooth LE: -9.43 dBm (Maximum out EIRP)
Data transfer	GPRS Multi-Slot Class 12 (up to 240 kbps)
Data support	SMS (text/data)

POWER

Input voltage range	10 - 30 V DC with overvoltage protection
Back-up battery	3.7 V 45 mAh
Power consumption	At 12V < 5 mA (Ultra Deep Sleep) At 12V < 7 mA (Deep Sleep) At 12V < 7 mA (Online Deep Sleep) At 12V < 8 mA (GPS Sleep) At 12V < 28 mA (nominal with no load)
Internal fuse	3A, 125V

BLUETOOTH

Specification	4.0 + LE
Supported peripherals	Temperature and Humidity sensor, Headset, Inateck Barcode Scanner, Universal BLE sensor support

OBD INTERFACE

Data	K-Line, CAN Bus data
Data reading	Up to 32 vehicle onboard parameters, 9 supported OBD protocols

INTERFACE

Connection	OBDII socket
GNSS antenna	Internal High Gain
GSM antenna	Internal High Gain
USB	2.0 Micro-USB
LED indication	2 status LED lights
SIM	Nano-SIM
Memory	128MB internal flash memory

PHYSICAL SPECIFICATION

Dimensions	52.6 x 29.1 x 26 mm (L x W x H)

OPERATING ENVIRONMENT

Operating temperature (without battery)	-40 °C to +85 °C
Storage temperature (without battery)	-40 °C to +85 °C
Operating humidity	5% to 95% non-condensing
Battery charge temperature	+10 °C to +45 °C
Battery discharge temperature	-20 °C to +60 °C
Battery storage temperature	-20 °C to +45 °C for 1 month -20 °C to +35 °C for 6 months

FEATURES

Sensors	Accelerometer
Scenarios	Green Driving, Over Speeding detection, Jamming detection, GNSS Fuel Counter, Excessive Idling detection, Unplug detection, Towing detection, Crash detection, Auto Geofence, Manual Geofence, Trip
Sleep modes	GPS Sleep, Online Deep Sleep, Deep Sleep, Ultra Deep Sleep
Configuration and firmware update	FOTA Web, FOTA, Teltonika Configurator (USB, Bluetooth), FMBT mobile application (Configuration)
SMS	Configuration, Events, Debug
GPRS commands	Configuration, Debug

Time Synchronization	GPS, NITZ, NTP
Fuel monitoring	OBDII
Ignition detection	Accelerometer, External Power Voltage, Engine RPM

Safety information

This message contains information on how to operate FMB002 safely. By following these requirements and recommendations, you will avoid dangerous situations. You must read these instructions carefully and follow them strictly before operating the device!

- The device uses SELV limited power source. The nominal voltage is +12 V DC. The allowed voltage range is +10...+30 V DC.
- To avoid mechanical damage, it is advised to transport the device in an impact-proof package. Before usage, the device should be placed so that its LED indicators are visible. They show the status of device operation.
- Before mounting device make sure that a ≥3A fuse is present on OBD connector power supply.
- Before unmounting the device from vehicle, ignition **MUST** be **OFF**.

Do not disassemble the device. If the device is damaged, the power supply cables are not *isolated* or the isolation is damaged, DO NOT touch the device before unplugging the power supply.

All wireless data transferring devices produce interference that may affect other devices which are placed nearby.

Please consult representatives of your vehicle model regarding OBDII location on your vehicle. In case you are not sure about proper connection, please consult qualified personnel.

The programming must be performed using a PC with autonomic power supply.

Installation and/or handling during a lightning storm is prohibited.

The device is susceptible to water and humidity.

Teltonika is not responsible for any harm caused by wrong cables used for connection between PC and FMB020

WARNING! Do not use FMB020 device if it distracts driver or causes inconvenience due to OBDII placement. Device must not interfere with driver.

Battery should not be disposed of with general household waste. Bring damaged or worn-out batteries to your local recycling center or dispose them to battery recycle bin found in stores.

Certification and Approvals

- FMB002 CE / RED
- FMB002 E-Mark
- FMB002 EAC
- FMB002 RoHS
- FMB002 REACH
- FMB002 Declaration of IMEI assignment
- FMB002 Declaration of device operation temperature

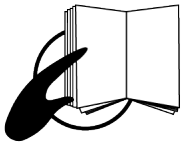

This sign on the package means that it is necessary to read the User's Manual before your start using the device. Full User's Manual version can be found in our Wiki.

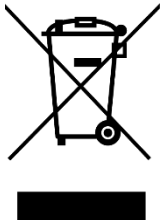

This sign on the package means that all used electronic and electric equipment should not be mixed with general household waste.

Hereby, Teltonika declare under our sole responsibility that the above described product is in conformity with the relevant Community harmonization: European Directive 2014/53/EU (RED).

18913-21-08591

Para maiores informações, consulte o site da ANATEL https://www.gov.br/anatel/pt-br

Este equipamento não tem direito à proteção contra interferência prejudicial e não pode causar interferência em sistemas devidamente autorizados.

For more information, see the ANATEL website https://www.gov.br/anatel/pt-br

This equipment is not entitled to protection against harmful interference and must not cause interference in duly authorized systems.

Warranty

TELTONIKA guarantees its products to be free of any manufacturing defects for a period of **24 months**. With additional agreement we can agree on a different warranty period, for more detailed information please contact our sales manager.

Contact us teltonika-gps.com/about-us/contacts/

All batteries carry a reduced 6 month warranty period.

If a product should fail within this specific warranty time, the product can be:

- Repaired
- Replaced with a new product
- Replaced with an equivalent repaired product fulfilling the same functionality
- TELTONIKA can also repair products that are out of warranty at an agreed cost.

Warranty Disclaimer

TELTONIKA PRODUCTS ARE INTENDED TO BE USED BY PERSONS WITH TRAINING AND EXPERIENCE. ANY OTHER USE RENDERS THE LIMITED WARRANTIES EXPRESSED HEREIN AND ALL IMPLIED WARRANTIES NULL AND VOID AND SAME ARE HEREBY EXCLUDED. ALSO EXCLUDED FROM THIS LIMITED WARRANTY ARE ANY AND ALL INCIDENTAL OR CONSEQUENTIAL DAMAGES INCLUDING BUT NOT LIMITED TO, LOSS OF USE OR REVENUE, LOSS OF TIME, INCONVENIENCE OR ANY OTHER ECONOMIC LOSS.

More information can be found at teltonika-gps.com/warranty-repair/